J. Agr. Sci. Tech. (2016) Vol. 18: 615-627

Data Reduction of a Numerically Simulated Sugar Extraction Process in Counter-current Flow Horizontal Extractors

H. Kiani[1]*, M. Hojjatoleslamy[2], and S. M. Mousavi[1]

ABSTRACT

In this work, Response Surface Methodology (RSM) and Artificial Neural Networks (ANN) were employed for the data reduction of a numerically simulated extraction process of sugar in an industrial RT2 extractor. The numerical model developed in OpenFOAM library was first validated using actual plant data and its stability and sensitivity to the processing variables was tested. Then, the model was used to generate data of juice and pulp sugar concentrations as affected by the main processing parameters including draft, Silin number, and capacity. The data were modelled using RSM and ANN. Both RSM and ANN were able to predict the data accurately, however, R^2 values obtained for ANN were slightly higher. Since the numerical model can be time consuming to be solved for all data ranges, the regression equation obtained by the RSM method or the network created according to the ANN model can be utilized as fast and ready to use tools to optimize the extractor.

Keywords: ANN, CFD, Mass transfer, Open FOAM, RSM.

INTRODUCTION

Extraction of sugar from beets is a solid–liquid extraction process that its efficiency depends on a number of processing parameters. During the extraction of sugar from beets, physical processes prevail (Asadi, 2007; Buttersack and Schliephake, 1998; Christodoulou, 2003). To a large extent, the design and optimization of extractors is influenced by operational factors including draft, temperature, shape, and surface of the cossettes, as well as the load factor and the type of the diffuser. Therefore, the issue of optimization of sugar extraction is a complex and dynamic problem, as many parameters are involved in the process (Buttersack and Schliephake, 1998; Ebell and Storz, 1982; Fathi & Sefidkon, 2012; Majdi *et al.*, 2012; Mostoufi *et al.*, 2010; Rajaei *et al.*, 2010; Yasoubi *et al.*, 2010). A mathematical model of counter-current flow that incorporates the diffusion and mass transfer laws, with spatial distribution of concentrations in the extraction field, is of great interest. The model can be potentially utilized for process design and process optimization. However, a mathematical model can be complicated and time consuming to be solved and its solution may need specialists and educated personnel.

There are different theoretical approaches describing the extraction practice (Ahmed Samatou *et al.*, 2007; Almeida *et al.*, 2010; Baümler *et al.*, 2011; Bruniche-Olsen, 1962; Buttersack and Schliephake, 1998; Carrín and Crapiste, 2008; Christodoulou, 2003; Ebell and Storz, 1982; Thomas *et al.*, 2007; Veloso *et al.*, 2005). The main phenomenon taken into account is the diffusion of solute from the tissue to the solvent.

Bearing in mind the above specifics, it appears essential to develop optimization

[1] Bioprocessing and Biodetection Lab, Department of Food Science, Technology and Engineering, University of Tehran, Islamic Republic of Iran.
[2] Department of Food Science and Technology, College of Agriculture, Islamic Azad University, Shahre Kord Branch, Shahre Kord, Islamic Republic of Iran.
*Corresponding author; e-mail: hokiani@ut.ac.ir

[Downloaded from jast.modares.ac.ir on 2024-10-12]

[DOR: 20.1001.1.16807073.2016.18.3.15.7]

models for this unit operation in order to evaluate the optimum parameters and conditions necessary for proper operation of the industrial sugar extractors.

In the present work, the objective was to propose a coupled model of extraction and apply it to an industrial plant that uses counter-current flow principle. It was intended that the verified model be fitted by using Response Surface Methodology (RSM) and Artificial Neural Networks (ANN). The effect of draft, capacity and Silin number (as a measure of cossette size) was to be evaluated to increase the concentration of juice while minimizing the sugar content in the pulp.

Extractor Specifications

The extractor evaluated in this study was a RT-2 horizontal extractor with a capacity of 100 ton h^{-1} based on processed beet with a diffuser drum diameter of 5.5 m and a total diffuser length of 31.6 m. A schematic of the extractor can be seen in Figure 1. By the smooth revolution of the drum, the juice staying at the bottom, is transported from the tail to the head end. The beet cossettes submerged in the juice are swept up by grids attached to the revolving drum until they slide off and fall into the next cell. Therefore, the cossettes and juice travel in opposite directions through the cylinder (Asadi, 2007; Christodoulou, 2003). The grids divide the drum into two parts each carrying half of the total beet cossettes.

The Numerical Model

In this work a mathematical model was developed to evaluate the mass transfer of solute from solid matter to the solvent. The flow of extraction juice and solid matter within the extractor was also considered.

Assumptions

The model was established based on the following assumptions:

- Extraction occurs at a constant temperature of 7 ±2°C and the pH value of the juice does not change along the extractor.
- The velocity of the solvent and beet cossettes is constant all over the extractor. A laminar flow of the juice occurs and possible local turbulences are neglected.
- The juice is located in the lower part of the extractor and its level is constant at one third of the diameter of the extractor.
- The system is considered as steady state.
- The juice flows within a porous media consisting of cossettes and simultaneous

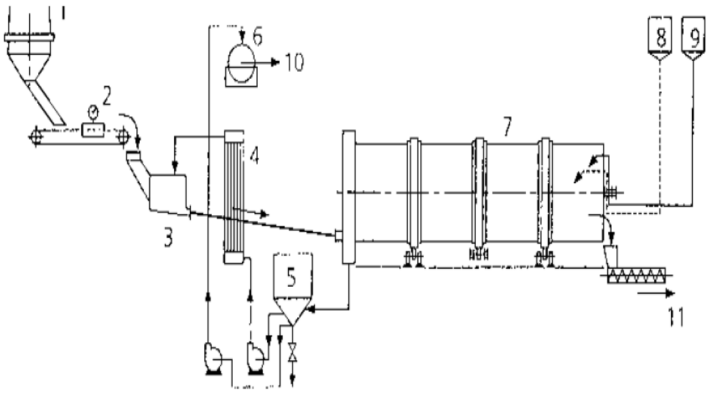

Figure 1. RT-2 extractor (Van der Poel *et al.*, 1998). (1) Slicer; (2) Cossettes belt and belt weighing scale; (3) Scalder; (4) Circulation juice heater; (5) Circulation juice tank; (6) Fine pulp separator; (7) RT-2 drum extractor; (8) Press water tank; (9) Fresh water tank; (10) Raw juice to pre-limer, and (11) Exhausted cossetted.

[Downloaded from jast.modares.ac.ir on 2024-10-12]

[DOR: 20.1001.1.16807073.2016.18.3.15.7]

fluid transport and mass transport occur during the extraction process.

- The same amount of extracted solute is replaced by solvent in the cossettes and then after pressing the cossettes, the solvent and the remaining juice in the exhausted cossettes will be introduced to the extractor again.

Governing Equations

Based on the assumptions detailed above, a model was adopted for the simulation and evaluation of counter current extraction process. This model was developed according to the literature on the mass transfer phenomena during extraction (Cerutti *et al.*, 2012; Cussler, 2009; Mostoufi *et al.*, 2010; Nakase and Takeshita, 2012; Veloso *et al.*, 2005). The governing equations are:

a) Momentum equation of the solvent (Newtonian, incompressible):

$$\varepsilon\frac{\partial\rho\vec{U}}{\partial t}+\nabla.(\rho\vec{U}\vec{U})-\nabla.\mu\nabla\vec{U}=-\nabla p \quad (1)$$

Were U, ρ, t, ε, μ and p are velocity (m s^{-1}), density (kg m^{-3}), time (s), volumetric fraction, viscosity (Pa s) and pressure (pa)

The above equation was used to determine the fluxes in the direction parallel to the diffuser axis. This allowed the mass balance to be obtained all over the diffuser, as will be discussed in the next paragraph. The Re number for axial flow of juice within the extractor was in a range that a laminar flow existed, as will be discussed later. Possible turbulences or flow due to the radial revolution of the diffuser were not considered in this equation, since they would not affect the overall flux of the juice and, instead, the radial flow were introduced separately to estimate the real Re number of the system utilized for mass transfer coefficient determination (Cerutti *et al.*, 2012).

b) Mass transfer equation for the solute in liquid phase:

$$\frac{\partial C}{\partial t}-E\nabla^2C-\varepsilon k_c a(\frac{t_{cont}}{t_{rev}})(C^*-C)+\nabla.(\vec{U}C)+k_{inv}C=0 \quad (2)$$

c) The concentration of the solute in the cossettes:

$$\frac{\partial C^*}{\partial t}+\varepsilon k_c a(\frac{t_{cont}}{t_{rev}})(C^*-C)=0 \quad (3)$$

The transient terms in Equations (1)-(3) are only valid for the startup stage of the process and in a steady state case that was considered in this study, these terms are neglected. Equation (2) can be derived for a control volume where the rate of accumulation of species (the first term) is related to the molecular and dispersive transport of the component in the solvent across the control volume (second Llaplacian term), transport of sugar from beet particles to the juice driven by the concentration gradient (third term), transport of the solute due to the convective flow of the juice (fourth term denoting flux driven mass flow) and inversion of the substance [last term in Equation (2)] (Cerutti *et al.*, 2012; Mostoufi *et al.*, 2010; Sotudeh-Gharebagh, 2009). One pivotal part of the equation is the third term in Equation (2) in which the main parameters affecting the transport of sugar from beet particles to the juice were considered. The overall mass transfer coefficient corresponds to the internal resistance of beet particles to sugar transport as well as external transport from the particles to the juice. Specific surface area of the particles, a, denotes the surface available for mass transfer and ε is the porosity of the system. The ration of contact time (t_{cont}) to drum revolution time (t_{rev}) is introduced in the equation to account for the contact time between the juice and beet particles.

The mass transfer coefficient (k_c) is calculated as a combination of mass transfer coefficient in the liquid and solid phase (Treybal, 1980):

$$k_c=\frac{k_{cl}k_{cs}}{k_{cl}+k_{cs}} \quad (4)$$

Where, mass transfer coefficient in the solid phase (k_{cs}) is a function of effective diffusivity of sugar in beet tissue (D_e), and is calculated as:

[Downloaded from jast.modares.ac.ir on 2024-10-12]

[DOR: 20.1001.1.16807073.2016.18.3.15.7]

$$k_{cs} = \frac{60D_e}{h^2 a} \quad (5)$$

The value of effective diffusivity for sucrose was obtained from the literature (Maroulis and Saravacos, 2003; Saravakos and Kostaropoulos, 2002).

The mass transfer coefficient in liquid phase (k_{cl}) is calculated according to dimensionless numbers Reynolds (Re), Schmidt (Sc) and Sherwood (Sh) as the following (Treyhal, 1980):

$$Sh = 0.442Re^{0.69}Sc^{0.42} \quad (6)$$

Where,

$$Re = V_s h\rho_j/\mu_j, \quad Sc = \mu_j/\rho_j D_{ab}, \quad Sh = k_{cl}h/D_{ab} \quad (7)$$

The value of diffusion coefficient of sucrose in water (D_{ab}) was obtained from the literature (Linder *et al.*, 1976; Maroulis and Saravacos, 2003; Saravakos and Kostaropoulos, 2002).

As mentioned before, in RT diffusers both radial and axial flow exists that can affect the actual Re number for the particles. To calculate the *Re* number, the velocity of juice in relation to the cossettes in Vertical and horizontal directions (V_s), was obtained by the following formula:

$$V_s = \sqrt{V_m^2 + V_h^2} \quad (8)$$

$$V_m = \frac{\dot{V}_j}{A} + \frac{\dot{V}_b}{A} \quad (9)$$

$$V_h = R\omega = R * 2 * 3.14 * (\frac{1}{t_{rev}}) \quad (10)$$

Where, V_h is the horizontal movement of cossettes due to the rotation of the extractor, as shown in Figure 2. A is the cross sectional area of the juice flow. R is the logarithmic average radius of the circle that beets are transferred horizontally along it, and ω is the angular velocity of the beets.

The dispersion coefficient (E) in the Laplacian term of the concentration is calculated by (Cussler, 2009):

$$E = 0.7D_{ab} + 0.5V_s h \quad (11)$$

The amount of sugar loss due to inversion was calculated using the following formula:

$$C_{inv} = k_{inv}C \quad (12)$$

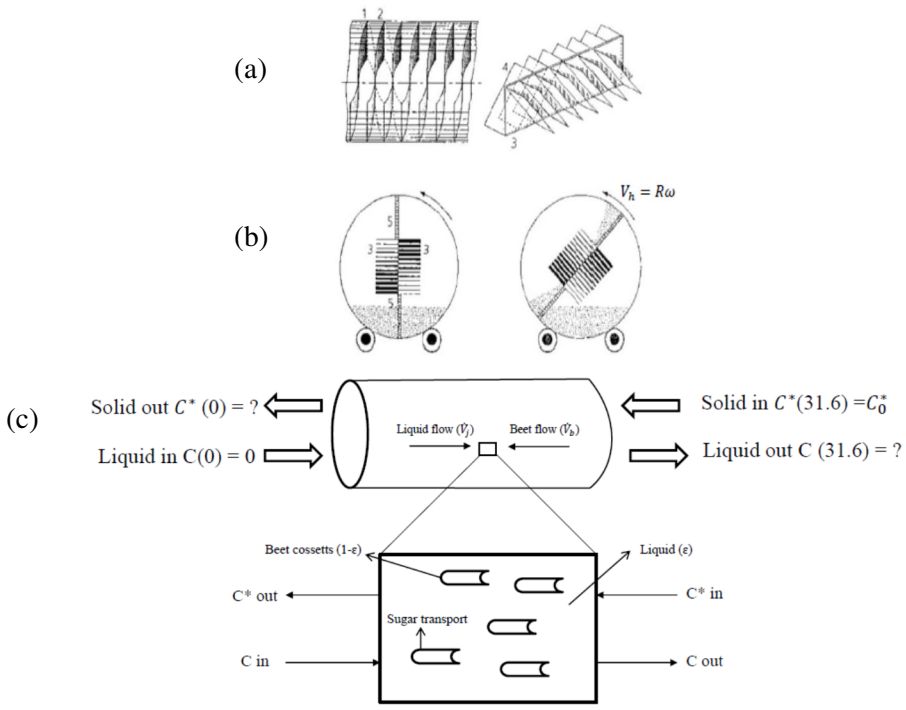

Figure 2. (a) Constitutive elements of an RT-2 extractor (Van der Poel *et al.*, 1998). (1 and 2): Helicoidal plates forming separate juice channels; (3) Transversal plate; (4) Slopping passages for cossettes, and (5) Transversal screens. (b) Extraction modeling domain of the extractor drum with boundaries illustrated. (c) A control volume in the extraction domain showing the transport phenomena.

[Downloaded from jast.modares.ac.ir on 2024-10-12]

[DOR: 20.1001.1.16807073.2016.18.3.15.7]

Where, the rate of sucrose inversion (k_{inv}) at a constant pH was obtained from the literature (Mostoufi *et al.*, 2010) with the value of 4×10^{-7} (s^{-1}).

All other physico-chemical properties including density and viscosity were taken from the literature (Asadi, 2007; Christodoulou, 2003; McGinnis, 1982).

Initial and Boundary Conditions

The modeling domain is depicted in Figure 2, in which the boundaries are shown. The extractor could be approximated by a cylindrical drum, and beet cossettes and juice could be considered as parts on one item with different volumetric fractions (ε). If radial variations were ignored, then, the problem could be considered a one-dimensional problem along the cylinder axis (z) and, therefore, the boundary and initial conditions could be reduced to:

$$\frac{\partial C}{\partial t} = 0 \quad (13)$$

$$C(z) = C \quad (14)$$

$$C(0) = 0 \quad (15)$$

$$C^*(z) = C^* \quad (16)$$

$$C^*(31.6) = C_0^* \quad (17)$$

$$\nabla p = 0 \quad (18)$$

$$U(0) = \frac{\dot{V}}{A} \quad (19)$$

Numerical Solution and Parameters Studied

All of the equations described in section 3 were implemented in Open FOAM library (version extend-1.6) and were solved for a 3-dimensional mesh in steady state (even for 1-dimensional problems, a 3-dimensional mesh should be used, however, variations only occurred in one direction). OpenFOAM software utilizes the control volume methodology. The transport phenomena in a control volume cell are illustrated in Figure 2-c.

The model was used to generate data of juice and pulp sugar concentrations as affected by the main processing parameters including draft, Silin number, and capacity.

The Data Reduction Method

Response Surface Method (RSM)

The goal of RSM is to simultaneously optimize the levels of the studied variables to obtain the desired response. The RSM design would result in a model including one or all linear and quadratic variables and their interaction terms as shown below:

$$Y_i = \beta_0 + \sum_{i=1}^{k} \beta_i X_i + \sum_{i=1}^{k} \beta_{ii} X_i^2 + \sum_i \sum_j \beta_{ij} X_i X_j + \varepsilon \quad (20)$$

Where, β_0 is constant, k is the number of factors, β_i represents the coefficients of the linear parameters, X_i represents the variables, β_{ii} is the coefficients of the quadratic parameters, β_{ij} represents the coefficients of the interaction parameters, and ε is the residual associated with the experiments. The faced centered central composite rotatable design was selected for three independent factors, each at three levels to fit the second-order polynomial model [Equation (20)].

The evaluated independent variables are shown in Table 1. The design and analysis of the experiments were performed using the Minitab (version 16) software.

Artificial Neural Networks (ANNs)

Table 1. Uncoded and coded levels of the independent variables used in the RSM design.

Coded variables	Silin number (S) (m)	Capacity (T)(ton h^{-1})	Draft (D) (%)
-1	10	90	105
0	12.5	105	112.5
1	15	120	120

[Downloaded from jast.modares.ac.ir on 2024-10-12]

[DOR: 20.1001.1.16807073.2016.18.3.15.7]

The Artificial Neural Networks (ANNs) simulate the human neural system to predict complicated relationships based on a previously learned pattern (Ghoreishi and Heidari, 2013). A network is made of several neurons that perform a mathematical function. The weighting and transfer function to obtain the output can be represented as the following:

$$\alpha_{jk} = F_k\left(\sum_{i=1}^{N_{k-1}} W_{ijk}\alpha_{i(k-1)} + \omega_{jk}\right) \quad (21)$$

Where, α_{jk} and ω_{jk} are the output and bias weight of neuron j located in layer k, respectively. F_k is the transfer functions (Fausett, 1994).

Based on the connection pattern of the neurons, different architectures have been proposed such as MLP (MultiLayer Perceptron), which is one of the common ANNs (Izadifar and Abdolahi, 2006; Kamali and Mousavi, 2008). In Figure 3, an example of the MLP network used in the present study is shown. The input layer consisted of three inputs of Silin number (m), capacity (ton h^{-1}), and draft (%). The network was repeated separately for sugar loss and juice sugar concentration, each network with one neuron in the output layer.

Back-propagation learning according to LM (Levenberg-Marquardt) method was used in this study. For hidden layer, the Logistic Sigmoid [$f(x)= 1/(1 + e^{-ax})$] function was used and for the output layer, a linear [$f(x)= x$] transfer function was employed. The training section was performed with 60 % of the data and the remaining data were used for the validation and testing steps. The goodness of fit was evaluated by using coefficient of determination (R^2) and Sum Squared Error (SSE) of the predicted data and the training was repeated until satisfactory results were obtained. The ANNs model was developed in MATLAB 2010 software.

RESULTS AND DISCUSSION

Validation of Numerical Simulation

The proposed mass transfer models were implemented in the OpenFOAM library and a solver was created for modelling the mass transfer and flow within the extractor. The stability of the model was evaluated by monitoring the residuals for velocity and concentration as well as the Courant number. The numerical simulations were checked for mesh independence before obtaining the final results. Stable data were gained by appropriate iteration steps. To further verify the model, the numerical simulation results were compared with actual plant data obtained from a sugar extraction factory. The comparison of the data is shown in Table 2. As seen in Table 2, the numerical data agreed with the actual plant data. The comparison shows that the model simulated the extraction process in

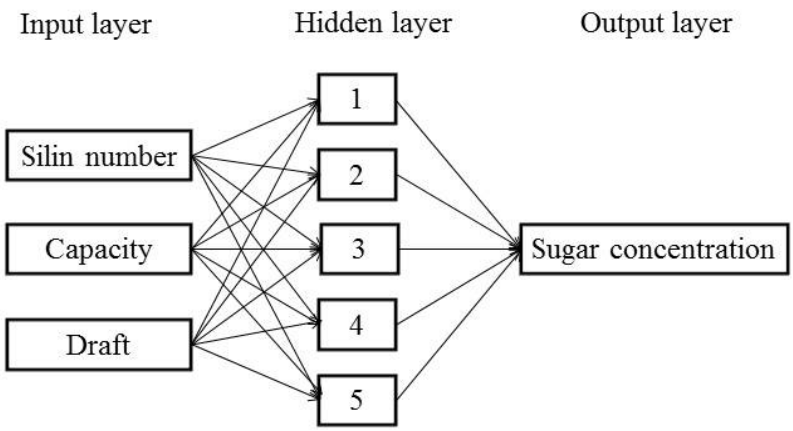

Figure 3. Schematic diagram of the artificial neural network for sugar extraction.

[Downloaded from jast.modares.ac.ir on 2024-10-12]

[DOR: 20.1001.1.16807073.2016.18.3.15.7]

Table 2. Experimental and numerical data of the extractor.

	Parameter	Value	
		Plant data (%)	Numerical (%)
	Draft	109±8	109*
	Silin number	12.5	12.5*
	Capacity	100 t h^{-1}	100 t h^{-1}*
Raw juice	Sugar	15.9±1	15.18
	Non-sugar	1.9±0.2	2.02
	Total dry substance	17.8±1.1	17.17
	Water content	82.2±1.1	82.83
	Juice Purity	88.8±1.3	88.27
Beet	Sugar	17.6±0.7	17.6*
	Non-sugar	3.8±0.3	3.8*
	Total dry substance	25.7±0.9	25.7*
	Water content	74.3±1	74.3*
	Purity	83.2±3.2	83.2*
Exhausted cossette	Sugar	-	1.27
	Non-sugar	-	0.54
	Total dry substance	-	6.11
	Water content	-	93.89
Press water	Sugar	1.1±0.5	1.33
	Non-sugar	0.5±0.2	0.6
	Total dry substance	1.6±0.4	1.8
	Water content	98.4±0.4	98.2
Pressed pulp	Sugar	1.12±0.1	1.06
	Non-sugar	0.5±0.1	0.5
	Total dry substance	21.8±1	21.74
	Water content	78.2±1	78.29

* Plant data used for numerical simulation.

accordance with the experimental data.

Analysis of the Data by RSM

The analysis of response surface design based on the variables shown in Table 1 revealed that the sugar concentration in the juice (C_j) and in the pulp (C^*) as affected by Silin number (S), capacity (T), and Draft (D), can be predicted using the following equations:

$$C_j = 214.45 + 19.9S - 1.27T - 1.32D - 0.51S^2 + 0.073ST - 0.032SD + 0.008TD \quad (22)$$

$$C^* = 50.6 - 10.51S + 1.5T - 0.45D + 0.64S^2 - 0.088ST \quad (23)$$

From the terms described in Equations (22) and (23), only the terms with significant effects ($P < 0.05$) examined according to the analysis of variance are presented. R^2 and adjusted R^2 were 98.48 and 97.96% for C_j and 97.34 and 96.42% for C^*, respectively. The analysis showed that all of the linear terms affected both C_j and C^*. The magnitude of the coefficients for each term was similar for C_j and C^*, however, they acquired opposite signs. This observation was due to the fact that increasing the mass transfer rate resulted in the decreased value of C^*, while C_j was increased. Among the quadratic terms, only Silin number exhibited a significant effect on the responses. Silin number can directly affect the transport of sugar from the cossettes to the juice and, therefore, its effect was dominant. The interactions revealed coefficients with small values and their effect was not significant

[Downloaded from jast.modares.ac.ir on 2024-10-12]

[DOR: 20.1001.1.16807073.2016.18.3.15.7]

with 99% confidence, but some of the terms showed significant effects at the confidence level of 90%.

The contours describing the influence of the variables on the values of C_j and C^* are shown in Figure 4.

As shown in Figure 4, increasing the draft decreased the concentration of the obtained juice. The cause of this observation was the higher amount of water used. Increasing the draft decreased the concentration of sugar in pulp.

In Figure 4, the major effect of Silin number on the concentration increase in the juice and concentration decrease in the pulp can be observed. Increasing the Silin number resulted in higher rates of mass transfer due to higher surface area provided for the transport of sugar. The results indicated that maintaining a high quality of cossettes can strongly increase the efficiency of the extractor.

Working capacity is a very important parameter in sugar factories. The effect of changing the capacity of the extractor in the range from 90 to 120 t h^{-1} is shown in Figure 4. Increasing the capacity at a constant draft decreased the juice concentration while

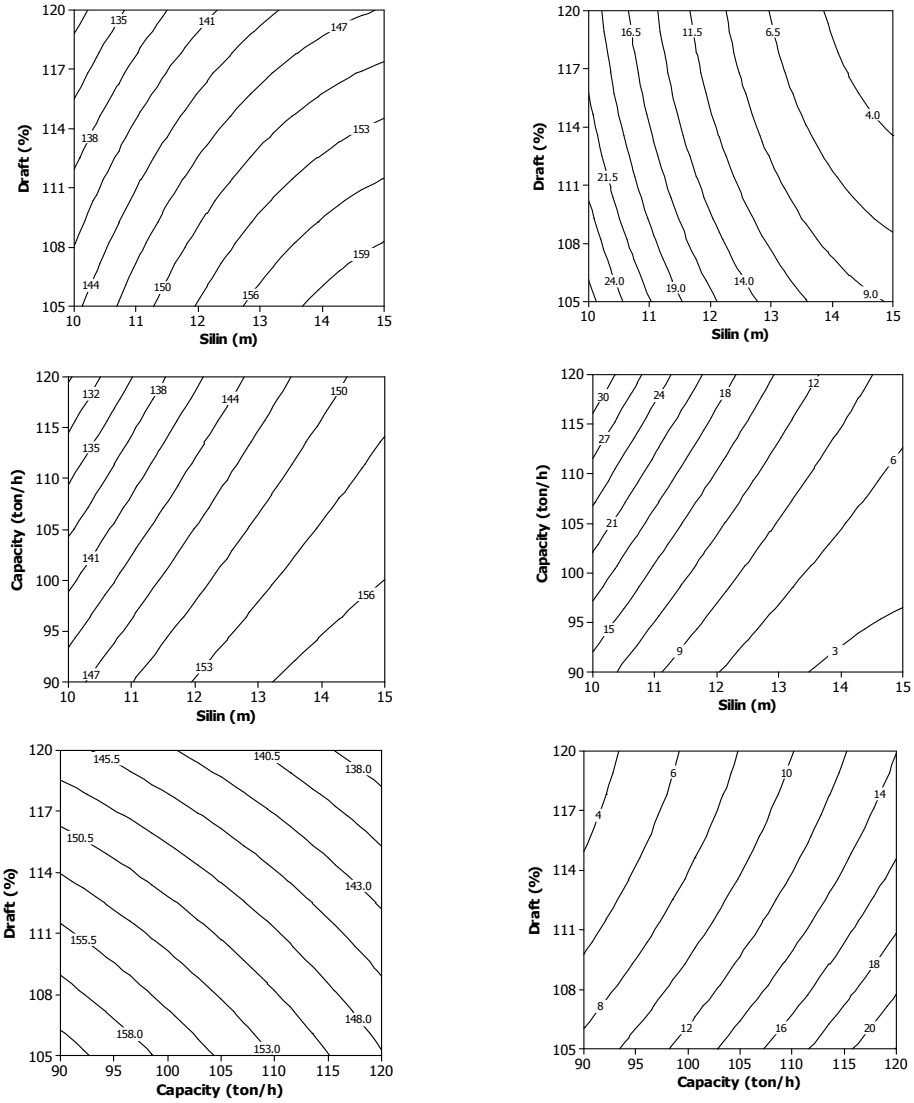

Figure 4. The effect of Silin number, draft, and capacity on the sugar concentration (kg m^{-3}) in raw juice (left) and exhausted pulp (right) as modelled by RSM.

[Downloaded from jast.modares.ac.ir on 2024-10-12]

[DOR: 20.1001.1.16807073.2016.18.3.15.7]

increasing the loss of sugar in the pulps.

ANN Modelling

It has been shown that an MLP network with a single hidden layer does not need neurons more than twice as many as input variable (Swingler, 1996). LM training algorithm has also been known as a fast and satisfactory algorithm with superior performance. Therefore, a MLP network with LM algorithms utilizing six neurons in a single layer was employed for the ANN modelling. The selected network accurately predicted the target data, as shown in Figure 5. The *SSE* of the obtained network was low for both C_j and C^* with values of 1.0×10^{-18} and 1.8×10^{-3}, respectively. R^2 values were close to one, as mentioned in Figure 5.

The Initial Weights (IW) matrix and the Biases (IB) of the optimum network for C_j were:

$$IW: \begin{bmatrix} -1.1159 & -2.3008 & 0.7318 \\ -1.8334 & -0.0260 & -2.0879 \\ 0.1769 & 0.6900 & 1.8406 \\ 0.0059 & 0.1843 & 2.3929 \\ 0.9771 & -0.6311 & 0.5668 \end{bmatrix}$$

$$IB: \begin{bmatrix} 2.2925 \\ 1.0789 \\ 0.9837 \\ -1.9814 \\ 0.8182 \end{bmatrix}$$

For C^*, the followings were the Initial Weights (IW) matrix and the Biases (IB) of the optimum network:

$$IW: \begin{bmatrix} 0.9549 & 1.2214 & -1.5378 \\ -3.0077 & 0.7644 & -2.4171 \\ 1.3143 & 1.6408 & 3.2979 \\ 1.1822 & 1.4460 & 1.8719 \\ -2.7287 & 0.7233 & 0.5131 \end{bmatrix}$$

$$\text{IB}: \begin{bmatrix} -2.8088 \\ 0.6624 \\ 1.3253 \\ 1.0178 \\ -1.3304 \end{bmatrix}$$

It should be noted that the accuracy of the ANN was a bit better than RSM since it gave higher R^2 values, although RSM prediction was accurate enough. The designed network was employed for the prediction of a wider range of C_j and C^* as influenced by Silin, capacity, and draft. The contour plots of the predicted data are shown in Figure 6. The plots can be useful for the optimization and design purposes.

The contour plots obtained for both RSM and ANN methods cover a wide range of the processing parameters studied in this research. The graphs can be utilized for the optimization purposes. For example, if a factory intends to increase the capacity of the diffuser while keeping the sugar loss in the cossettes at a constant level, the draft can be regulated according to the values shown

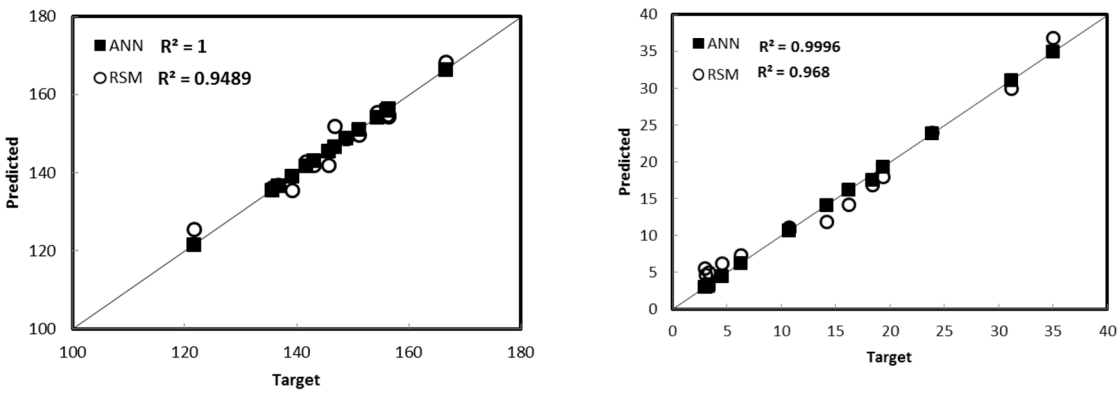

Figure 5. The effect of diffuser working capacity and draft on the sugar concentration (kg m^{-3}) in raw juice (left) and pulp (right) as predicted by RSM and ANN.

[Downloaded from jast.modares.ac.ir on 2024-10-12]

[DOR: 20.1001.1.16807073.2016.18.3.15.7]

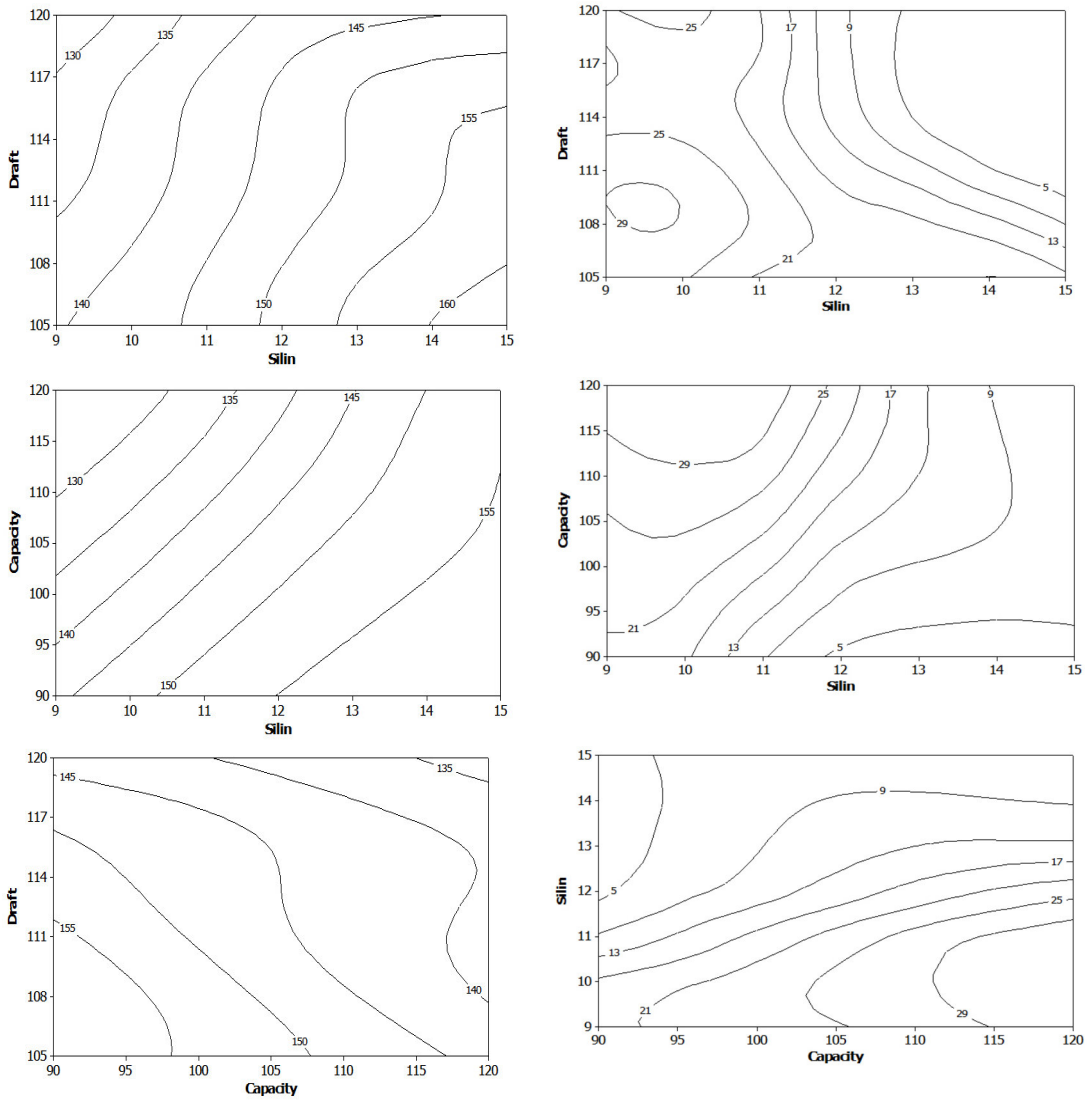

Figure 6. The effect of Silin number (m), capacity (ton h^{-1}) and draft (%) on the sugar concentration (kg m^{-3}) in juice (left) and pulp (right) as modelled by ANN.

in the plots.

CONCLUSIONS

In this work, Response Surface Methodology (RSM) and Artificial Neural Networks (ANN) were employed in combination with numerical simulation to model and optimize the extraction process of sugar in an industrial RT-2 type extractor. The numerical model incorporated all major complexities and parameters involved in the extraction i.e. dispersion coefficients due to both vertical and horizontal flow of cossettes, effective diffusion of sugar in beet tissue, counter current flow of juice and beet, etc. The model was sensitive to changes in the processing parameters such as draft, Silin number, and extractor capacity. A limited range of numerical data were used to develop RSM and ANN models for the prediction of the behavior of the system in a wider range, after validation of the numerical data versus actual plant results. The effect of draft (juice to cossettes mass ratio), Silin number, and capacity was studied. Both RSM and ANN were able to predict the data accurately. The R^2 values

[Downloaded from jast.modares.ac.ir on 2024-10-12]

[DOR: 20.1001.1.16807073.2016.18.3.15.7]

obtained for ANN were slightly higher. Since the numerical model can be time consuming to be solved for all data ranges, the regression equation obtained by the RSM method or the network created according to the ANN model can be utilized as fast and ready-to-use tools for the optimization of the extractor in sugar processing factories.

Nomenclature

A: Surface area (m^2), a: Specific surface area (m^2 m^{-3}), Bx: Brix (%), C: Sugar concentration in the solution (kg m^{-3}), C^*: Sugar concentration in the beet pulp (kg m^{-3}), C_{inv}: Invert sugar concentration in juice (kg m^{-3} S^{-1}), C_{ns}: Non-sugars concentration in the juice (kg m^{-3}) , C_{ns}^*: Non-sugars concentration in the pulp (kg m^{-3}), D: Diffusion coefficient (m^{-2} s^{-1}), D_{ab}: Molecular diffusion coefficient of sucrose in water (m^{-2} s^{-1}), D_e: Effective diffusion coefficient (m^{-2} s^{-1}), E: Dispersion coefficient (m^{-2} s^{-1}), h: Thickness of beet cossettes (m), k_c: Mass transfer coefficient (m s^{-1}), k_{cl}: Mass transfer coefficient in liquid (m s^{-1}), k_{cs}: Mass transfer coefficient in solid (m s^{-1}), k_{inv}: Invert sugar production rate constant (s^{-1}), p: Pressure (Pa), R: Radius (m), Re: Reynolds number, Sc: Schmidt number, Sh: Sherwood number, T: Temperature (K), t: Time (s), t_{cont}: Contact time between juice and beet (s), t_{rev}: Extractor drum revolution time (s), U: Velocity (m s^{-1}), V: Volume (m^3), V_s: Velocity of juice in relation to the cossettes (m s^{-1}), V_h: Horizontal velocity (m s^{-1}), V_m: Vertical velocity (m s^{-1}), $\dot{V}_j$: Volumetric flow rate of juice (m^3 s^{-1}), $\dot{V}_b$: Volumetric flow rate of beet (m^3 s^{-1}), ρ: Density (kg m^{-3}), ρ_b: Beet density (kg m^{-3}), ρ_j: Juice density (kg m^{-3}), ε: Volumetric ratio of juice to the juice and beet mixture, porosity, μ: Viscosity (Pa s), ω: Angular velocity (m s^{-1}).

ACKNOWLEDGEMENTS

The authors wish to thank the Kavoush Agricultural Research, and Technical and Laboratory Services Corporation for the financial and technical support. We are also thankful of Isfahan Sugar Factory for providing technical and experimental data. Extended thanks to Enggineers R. Majidi and T. Moradizadeh for their cooperation.

REFERENCES

1. Ahmed Samatou, J., Engbert Wentink, A., Alexandra J.Rosa, P., Margarida Azevedo, A., Raquel Aires-Barros, M., Bäcker, W. and Górak, A. 2007. What is the title of the paper? *17th European Symposium on Computer Aided Process Engineering*, Elsevier, **24**.
2. Almeida, R. L., Ravagnani, M. A. S. S. and Modenes, A. N. 2010. Soybean Oil Extraction in Belt Extractors with Miscella Recirculation. *Chem. Eng. Proc.,* **49**: 996-1005.
3. Asadi, M. 2007. *Beet-Sugar Handbook*. John Wiley and Sons, Inc., Hoboken, New Jersey.
4. Baümler, E. R., Carelli, A. A., Crapiste, G. H. and Carrín, M. E. 2011. Solvent Extraction Modeling of Vegetable Oil and Its Minor Compounds. *J. Food Eng.,* **107**: 186-194.
5. Bruniche-Olsen, H. 1962. *Solid–liquid Extraction*. Nyt Nordisk Forlag, Copenhagen.
6. Buttersack, C. and Schliephake, D. 1998. Extraction Theory. In: What is title???? (Eds.): Van der Poel, R. W., Schiweck, H. and Schwartz, T.. Verlag Bartens KG, Berlin, Germany, PP. 310-327.
7. Carrín, M. E. and Crapiste, G. H. 2008. Mathematical Modeling of Vegetable Oil–solvent Extraction in a Multistage Horizontal Extractor. *J. Food Eng.,* **85**: 418-425.
8. Cerutti, M. L. M. N., de Souza, A. A. U. and de Souza, S. M. D. A. G. U. 2012. Solvent Extraction of Vegetable Oils: Numerical and Experimental Study. *Food Biop. Proc.,* **90**: 199-204.
9. Christodoulou, P. 2003. Sugars and Carbohydrates. In: What is title???? (Ed.):

[Downloaded from jast.modares.ac.ir on 2024-10-12]

[DOR: 20.1001.1.16807073.2016.18.3.15.7]

Tzia, C.. Marcel Dekker, G. L., Inc., New York.
10. Cussler, E. L. 2009. *Diffusion Mass Transfer in Fluid Systems.* Third Edition, Cambridge University Press, Cambridge.
11. Ebell, H. O. and Storz, M. 1982. Diffusion. In: What is title???? (Ed.): McGinnis, R. A.. 3rd Edition, Beet Sugar Development Foundation, Fort Collins, PP. 119-153.
12. Fathi, E. and Sefidkon, F. 2012. Influence of Drying and Extraction Methods on Yield and Chemical Composition of the Essential Oil of *Eucalyptus sargentii*. *J. Agr. Sci. Tech.,* **14**: 1035-1042.
13. Fausett, L. 1994. Fundamentals of Neural Networks: Architectures, Algorithms, and Applications. Prentice-Hall, Inc., Location????
14. Ghoreishi, S. M. and Heidari, E. 2013. Extraction of Epigallocatechin-3-gallate from Green Tea *via*. Supercritical Fluid Technology: Neural Network Modeling and Response Surface Optimization. *J. Sup. Flu.,* **74**: 128-136.
15. Izadifar, M. and Abdolahi, F. 2006. Comparison between Neural Network and Mathematical Modeling of Supercritical CO_2 Extraction of Black Pepper Essential Oil. *J. Sup. Flu.,* **38**: 37–43.
16. Kamali, M. J. and Mousavi, M. 2008. Analytic, Neural Network, and Hybrid Modeling of Supercritical Extraction of *α*-Pinene. *Journal name??* **47**: 168–173.
17. Linder, P. W., Polson, A. and Rodaers, A. L. 1976. The Diffusion Coefficient of Sucrose in Water. *J. Chem. Edu.,* **53**: 330-332.
18. Majdi, S., Barzegar, M., Jabbari, A. and AghaAlikhani, M. 2012. Supercritical Fluid Extraction of Tobacco Seed Oil and Its Comparison with Solvent Extraction Methods. *J. Agr. Sci. Tech.,* **14**: 1053-1065.
19. Maroulis, Z. B. and Saravacos, G. D. 2003. *Food Process Design*. CRC Press.
20. McGinnis, R. A. 1982. *Beet-sugar Technology*. Beet Sugar Development Foundation, Fort Collins.
21. Mostoufi, N., Faridkhou, A., Gharebagh, R. S. and Norouzi, H. R. 2010. Dynamic Modelling of the Sugar Extraction Process from Sugar Beet. *Food Manufac. Eff.,* **3**: 49-56.
22. Nakase, M. and Takeshita, K. 2012. Numerical and Experimental Study on Oil-water Dispersion in New Countercurrent Centrifugal Extractor. *Procedia Chem.,* **7**: 288-294.
23. Rajaei, A., Barzegar, M., Hamidi, Z. and Sahari, M. 2010. Optimization of Extraction Conditions of Phenolic Compounds from Pistachio (P*istachia vera*) Green Hull through Response Surface Method. *J. Agr. Sci. Tech.,* **12**: 605-615.
24. Saravakos, G. D. and Kostaropoulos, A. E. 2002. *Handbook of Food Processing Equipment*. Springer, Location???
25. Sotudeh-Gharebagh, R. S. H. M. N. N. H. R. 2009. Modeling and Optimization of the Sugar Extraction Process. *Int. J. Food Eng.,* **5**: 1-21.
26. Swingler, K. 1996. *Applying Neural Networks: A Practical Guide*. Morgan Kaufman Publishers, Inc., San Francisco.
27. Thomas, G. C., Veloso, G. O. and Krioukov, V. G. 2007. Mass Transfer Modelling in Counter-current Crossed Flows in an Industrial Extractor. *Food Biop. Proc.,* **85**: 77-84.
28. Treybal, R. E. 1980. *Mass-transfer Operations*. McGraw-Hili, Inc., Singapore.
29. Van der Poel, R. W., Schiweck, H. and Schwartz, T. 1998. *Sugar Technology*. Verlag Bartens KG, Berlin.
30. Veloso, G. O., Krioukov, V. G. and Vielmo, H. A. 2005. Mathematical Modeling of Vegetable Oil Extraction in a Counter-current Crossed Flow Horizontal Extractor. *J. Food Eng.,* **66**: 477-486.
31. Yasoubi, P., Barzegar, M., Sahari, M. and Azizi, M. 2010. Total Phenolic Contents and Antioxidant Activity of Pomegranate (*Punica granatum* L.) Peel Extracts. *J. Agr. Sci. Tech.,* **9**: 35-42.

[Downloaded from jast.modares.ac.ir on 2024-10-12]

[DOR: 20.1001.1.16807073.2016.18.3.15.7]

بهینه سازی یک مدل عددی به دست آمده برای فرایند استخراج قند در یک دستگاه استخراج افقی با جریان غیر هم جهت

ح. کیانی، م. حجت الاسلامی، و س. م. موسوی

چکیده

در این تحقیق روش های سطح پاسخ و شبکه عصبی مصنوعی برای بهینه سازی فرایند استخراج قند در یک دستگاه استخراج افقی بر اساس یک مدل شبیه سازی شده عددی به کار رفتند. مدل شبیه سازی شده عددی که در نرم افزار OpenFOAM به دست آمده بود ابتدا با داده های واقعی کارخانه قند معتبر سازی شد. سپس مدل برای به دست آوردن داده های مربوط به غلظت شربت و تفاله در مقادیر مختلف کشش، عدد سیلین و ظرفیت به کار رفت. سپس داده ها با استفاده از روش سطح پاسخ و شبکه عصبی مصنوعی مدل گردیدند. هر دو این روش ها به خوبی داده ها را پیش بینی کردند ولی R^2 روش شبکه عصبی مصنوعی کمی بالاتر بود. از آنجایی که مدل عددی زمانبر می باشد و پیچیده تر است، مدل رگرسیونی حاصل از روش سطح پاسخ و شبکه به دست آمده با روش شبکه عصبی مصنوعی می توانند به عنوان روش هایی سریع و ساده برای بهینه سازی دستگاه استخراج به کار روند.

[Downloaded from jast.modares.ac.ir on 2024-10-12]

[DOR: 20.1001.1.16807073.2016.18.3.15.7]